COMUNELLOFRAME

1255

Chiave esagonale per squadrette

Hexagonal key wrench for corner-joints
Clé hexagonale pour equerre
Sechseckiger Schlussel fur Eckverbinder
Llave hexagonal
Шестигранный ключ

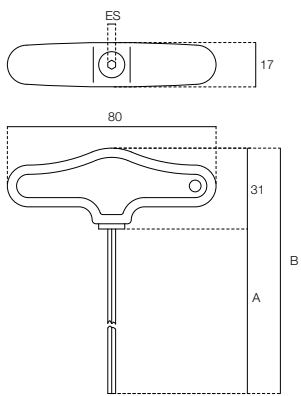

Art	Cod	A mm	B mm	Pcs/pack	Kg/pack
1255-MM.3	11704505	95	126	50	1,7
1255-MM.4	11704510	148	179	50	2,1
1255-MM.5	11704515	148	179	50	2,9

FINISHING: Zincato / Galvanized / Galvanisée / Verzinkt / Galvanizada / Цинкование